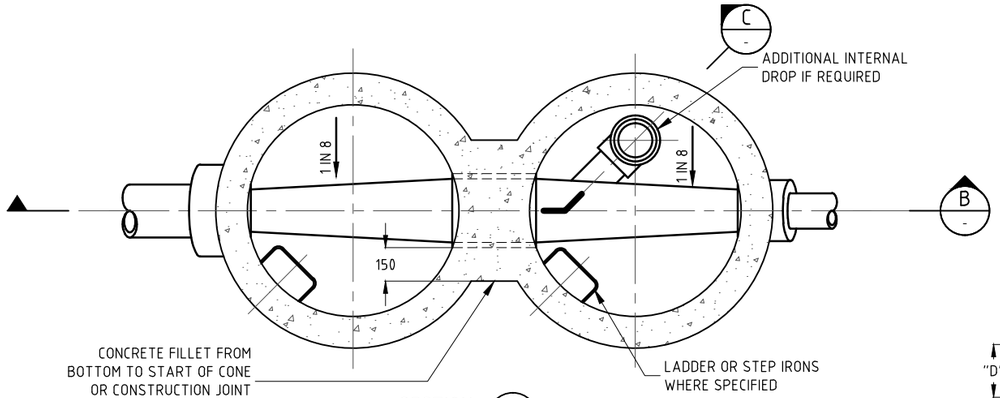

SECTION A
SCALE : N.T.S.

SECTIONAL PLAN

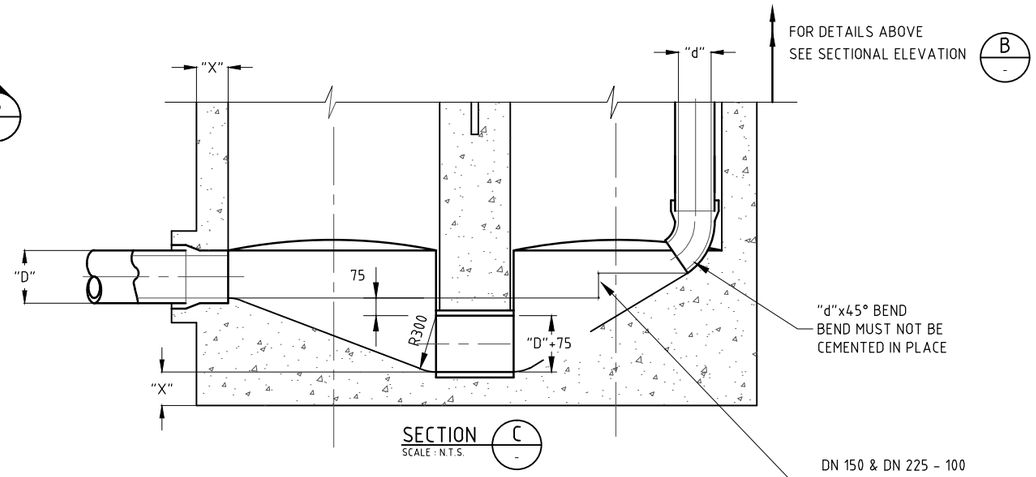

SECTION C
SCALE : N.T.S.

PARTIAL SECTIONAL ELEVATION
INTERNAL DROP ARRANGEMENT

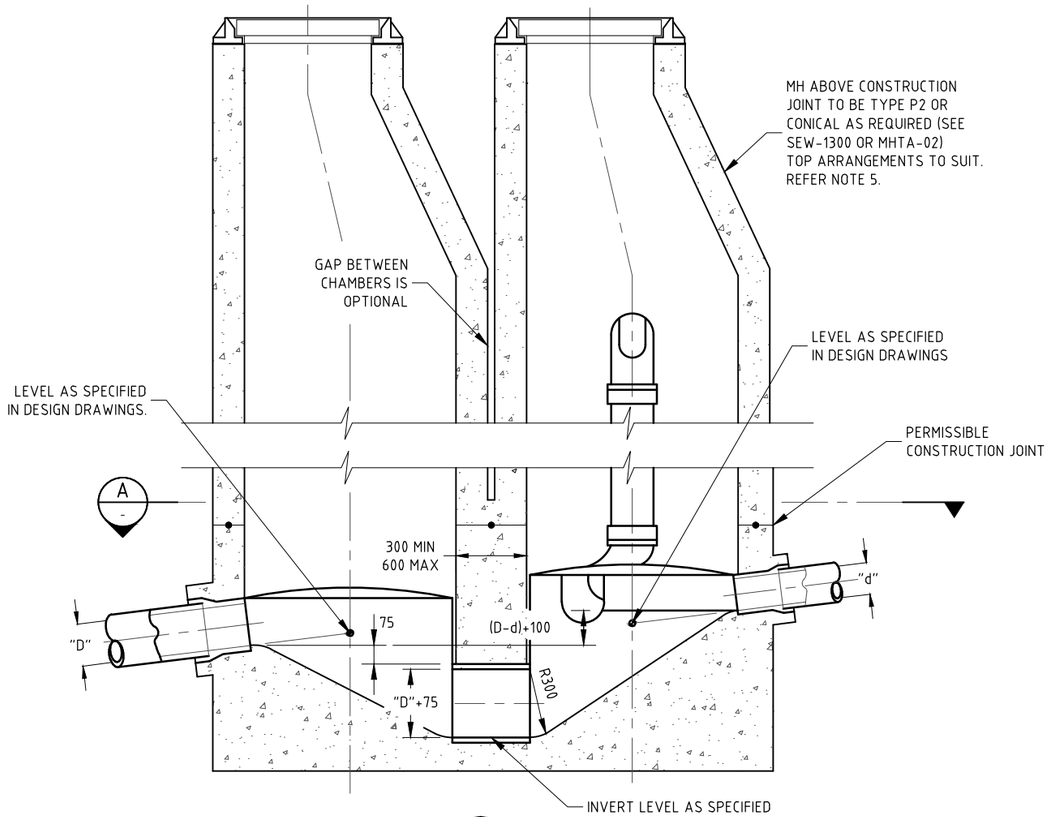

SECTION B
SCALE : N.T.S.

SECTIONAL ELEVATION

TABLE 1 - INTERNAL DROP MH DIMENSIONS

"d" (DN)	MH DIAMETER	DIM "X" MIN
≤ 300	DN 1050 - DN 1200	150
>300 TO <600	DN 1500	225
≥ 600	DN 1800	225

NOTES:

1. ALL DIMENSIONS IN MILLIMETRES.
2. CONSTRUCTION JOINTS BETWEEN BASES OF TWO CHAMBERS NOT PERMITTED.
3. AN APPROVED PROTECTIVE COATING MUST BE APPLIED TO THE INTERNAL WALLS, THE UNDERSIDE OF ACCESSCOVER, BASE AND CHANNEL AREAS OF THE DOWNSTREAM CHAMBER ONLY.
4. ALL STEPIRONS LOCATED IN DOWNSTREAM CHAMBER MUST BE STAINLESS STEEL OR PLASTIC ENCAPSULATED STEEL.
5. CHAMBERS TO BE INSTALLED IN ACCORDANCE WITH STANDARD DRAWINGS MHTA-01 AND MHTA-02.
6. THIS DRAWING REPLACES SEW-1411.

THIS DRAWING IS TO BE READ IN CONJUNCTION WITH THE MRWA EDITION OF THE WSAA SEWERAGE CODE WSA-02-2002.3, STANDARD DRAWINGS AND WSAA PRODUCT SPECIFICATIONS.

REV	ZONE	DESCRIPTION	DATE	DESIGNED	DRAWN	DES. CHK.	DRAFT CHK.
0		TECHNICAL ADDENDUM REV. C	01/2015	ANDREW D.	LAIJU M. A.	COLIN P.	COLIN P.

COPYRIGHT
"THIS DOCUMENT IS AND SHALL REMAIN THE PROPERTY OF SOUTH EAST WATER CORPORATION. THIS DOCUMENT MAY ONLY BE USED FOR THE PURPOSE FOR WHICH IT WAS COMMISSIONED AND IN ACCORDANCE WITH THE TERMS OF ENGAGEMENT FOR THE COMMISSION. THIS DESIGN SHOULD NOT BE COPIED OR AMENDED WITHOUT WRITTEN PERMISSION FROM SOUTH EAST WATER. UNAUTHORISED USE OF THIS DOCUMENT IN ANY WAY IS PROHIBITED." ©

South East Water Corporation
20 Corporate Drive
Heatherton VIC 3202
T 61 3 9552 3000 F 61 3 9552 3001
E info@sew.com.au www.sew.com.au

MELWAY REF: N/A | SHEET SIZE: A1 (FULL SIZE PLOT) | APPROVED: EAMON C.

SOUTH EAST WATER CORPORATION
MAINTENANCE HOLE TECHNICAL ADDENDUM
WATER SEAL ARRANGEMENTS
TWIN MAINTENANCE HOLE SYSTEM

PLAN TYPE: CIVIL
SCALE: N.T.S.
DRAWING NUMBER: MHTA-06
REV: 0

THE ORIGINAL DRAWING WAS HAND SIGNED BY THE PERSON WHOSE NAME OR INITIALS APPEAR PRINTED AND MARKED THUS (#) IN THE SIGNATURE BLOCKS.

CAD FILE NAME: C:\Users\mmedomac\AppData\Local\Microsoft\Windows\INetCache\Content.Outlook\R6HI94PP\MHTA-06.dwg
Plotted @ 07/8/2018 11:39am by mmedomac
ORIGINAL SIZE A1
DO NOT SCALE - IF IN DOUBT, ASK